# SPT15 / SPT18 / SPT20

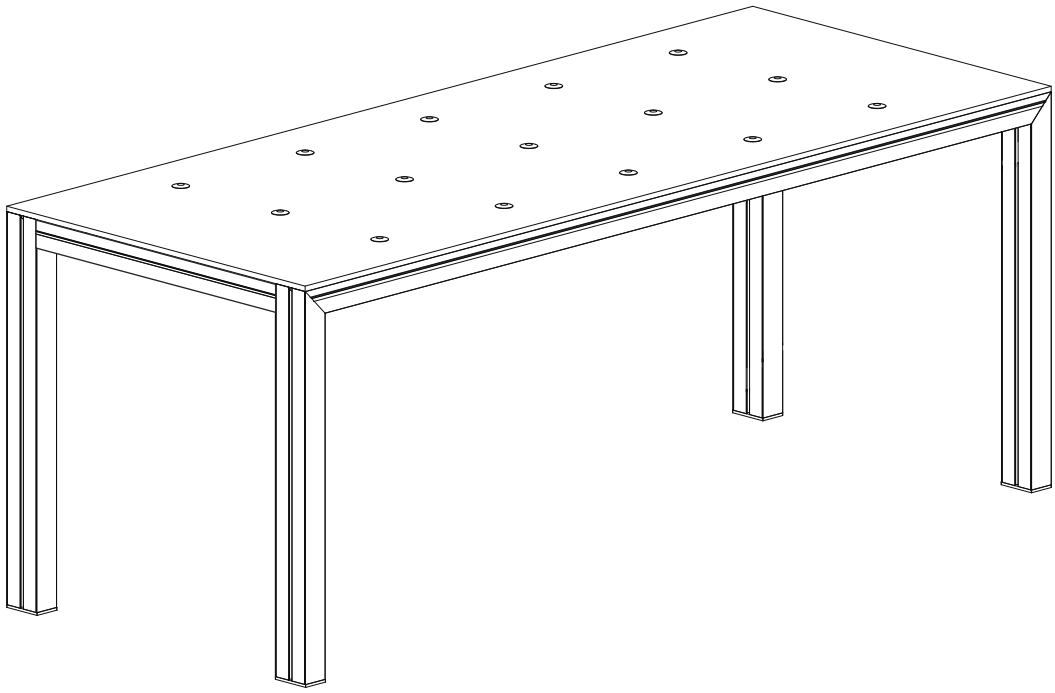

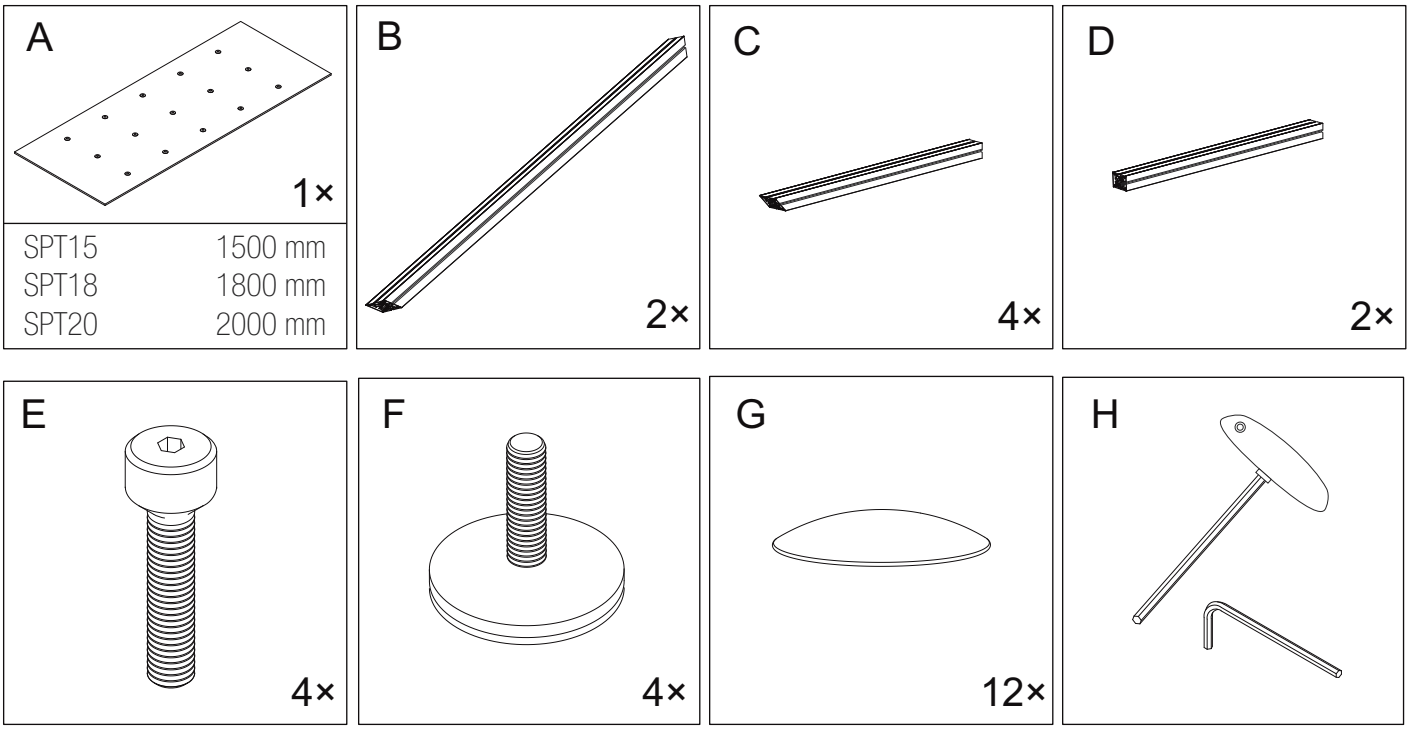


**Frame Displays USA**
22821 Silverbrook Center Dr., Suite 140, Sterling, VA 20166
1-703-435-7770
www.framedisplays.com • info@framedisplays.com

**Frame Displays CANADA**
416-877-7415
www.framedisplays.com • info@framedisplays.com

Other international +1 703-435-7770
Fax +1 703-435-3180

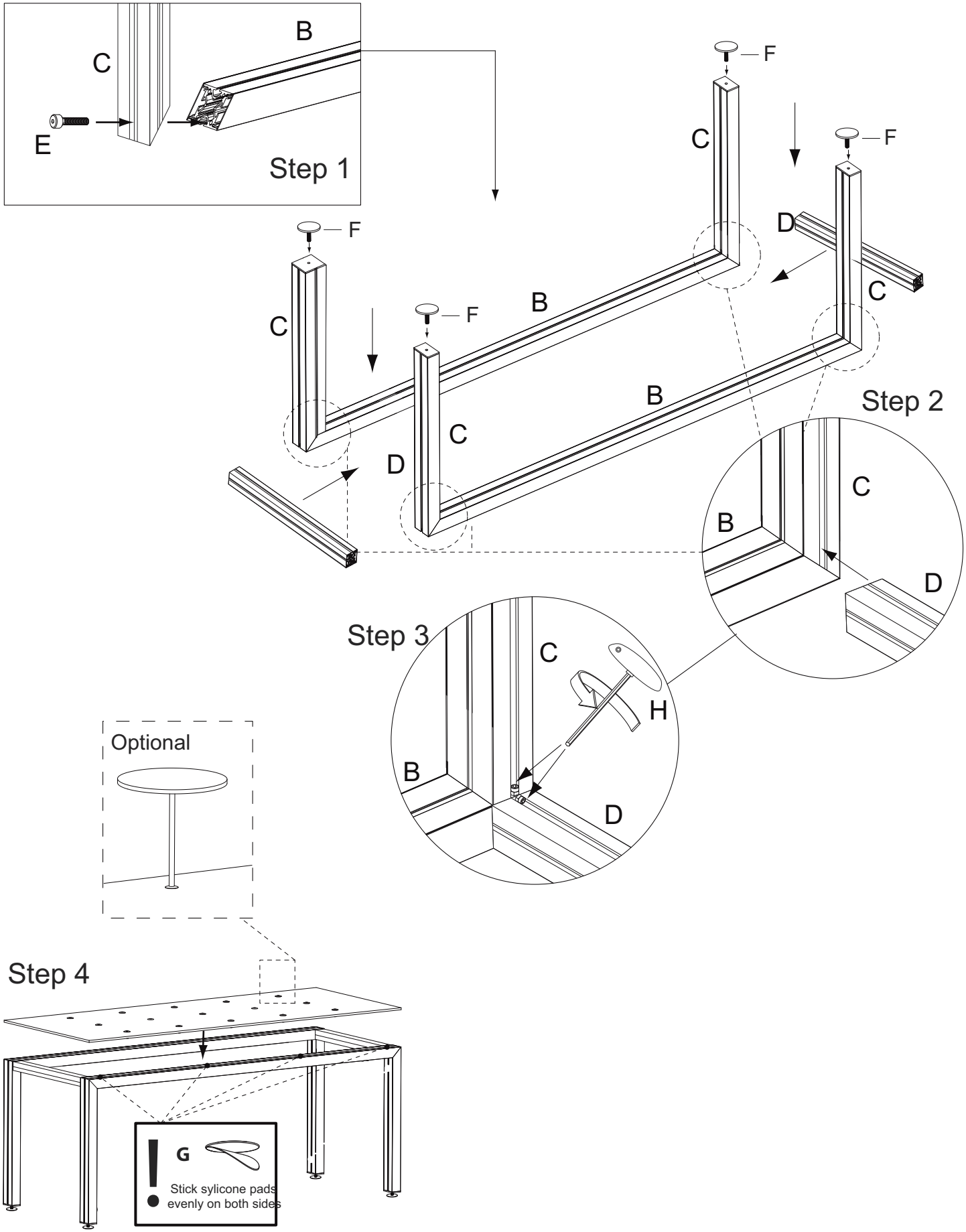
B
C
E
Step 1
F
C
F
D
C
F
C
F
B
B
C
D
Step 2
C
B
D
Step 3
C
H
B
D
Optional
Step 4
G
Stick sylicone pads
evenly on both sides