AR 1

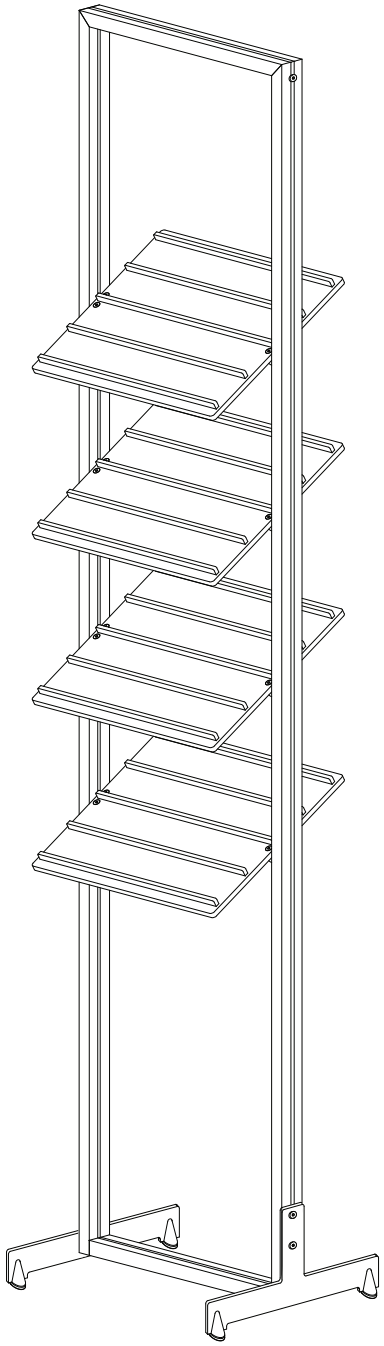

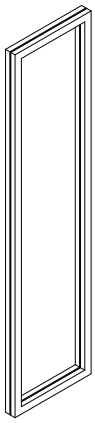

A

1×

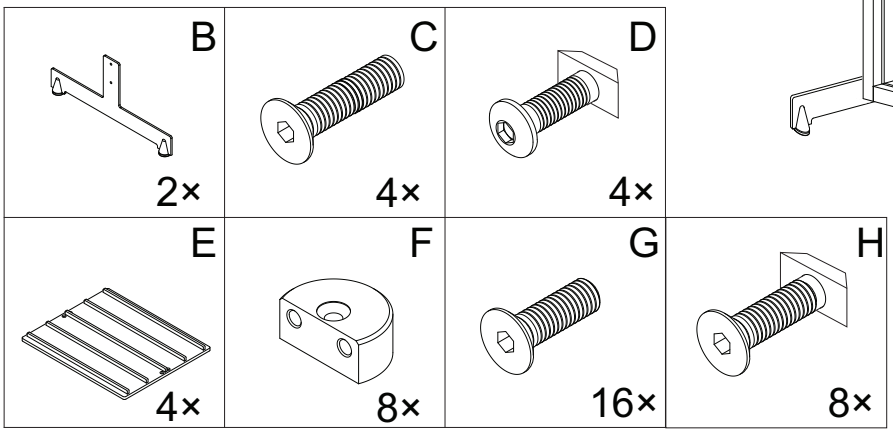

Frame Displays USA
22821 Silverbrook Center Dr., Suite 140, Sterling, VA 20166
1-703-435-7770
www.framedisplays.com • info@framedisplays.com

Frame Displays CANADA
416-877-7415
www.framedisplays.com • info@framedisplays.com

Other international +1 703-435-7770
Fax +1 703-435-3180

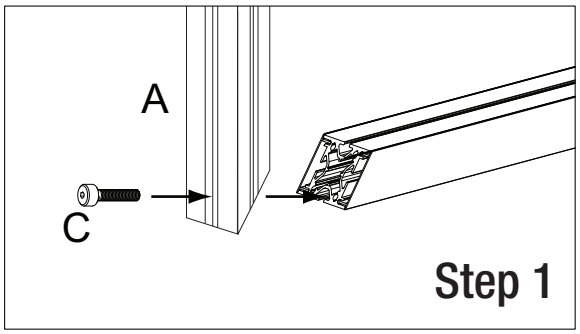
A
C
Step 1

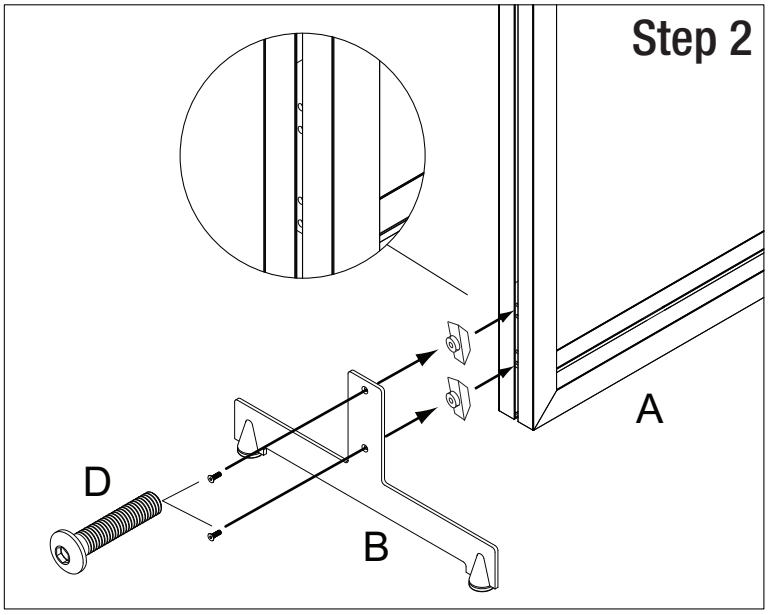
Step 2
A
D
B

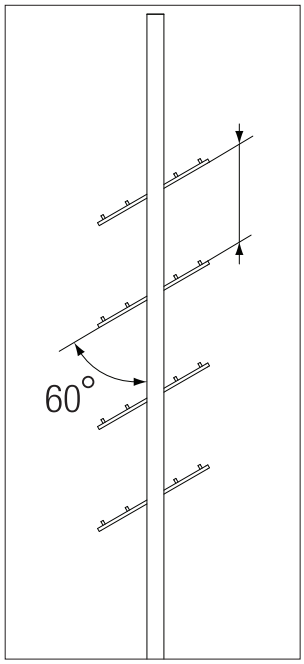
60°

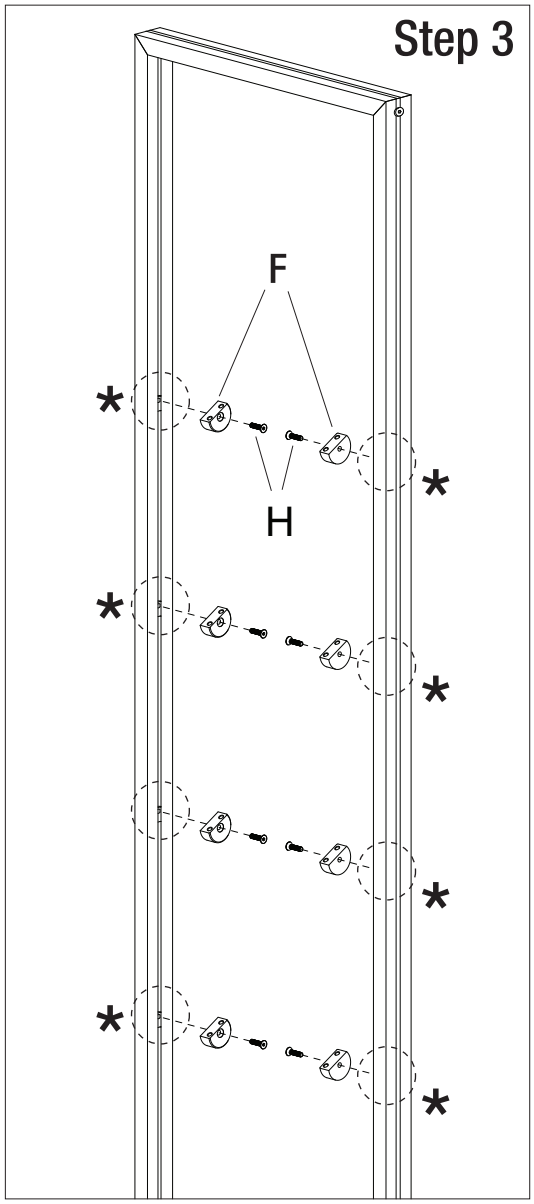
Step 3
F
H
*

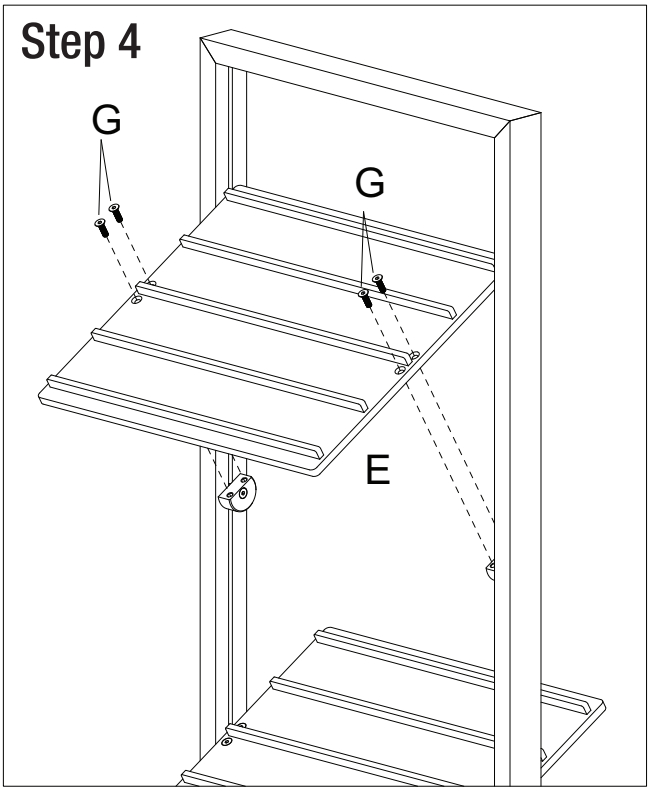
Step 4
G
G
E